AM-68
LOW NOISE · HIGH TORQUE
INTELLIGENT

SMART ERA STARTS FROM THE WINDOW

Improve life with technology

BE QUIETER
BE MORE ENERGETIC

Quiet, under your control

Automatic opening and closing curtain motor

One press of remote control

Easy opening and closing

9 EXPERIMENTAL DATA PROVE STRENGTH

AM-68 is not afraid of challenges, speaks with data

26 dB
Mute index

65W
Electric power

65W
Safety load

360°
No dead ends

20years
Service life

15000 times
Aging test

IP20
Protection level

21years
Focus on industry

5years
5 years warranty

The parameters mentioned above are subject to actual use, all data are derived from the testing center laboratory and are not absolute values.

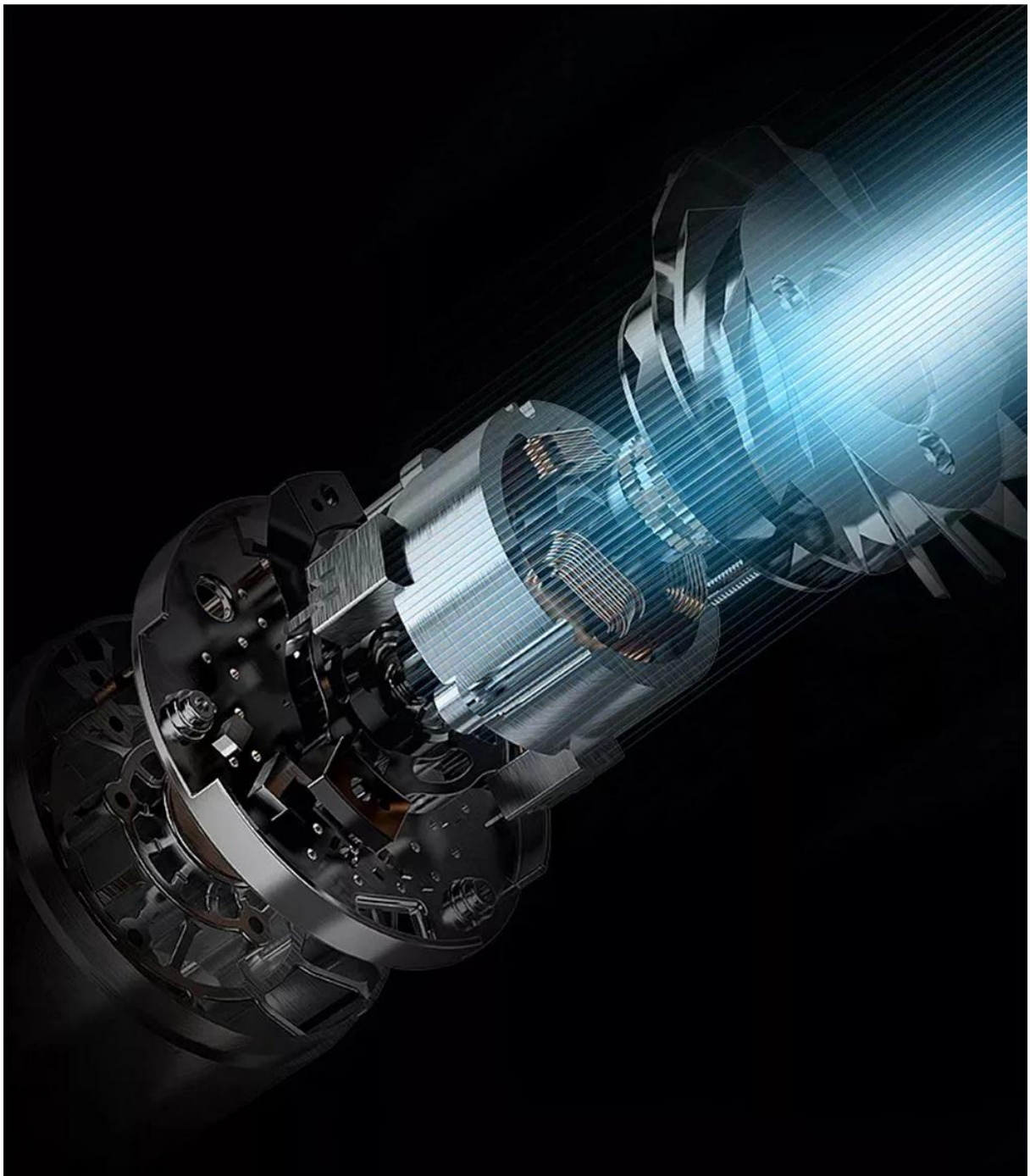

HIGH-POWER BRUSHLESS MOTOR

The brushless motor equipped with the high-power barrel motor not only stabilizes the power of Bombay, but also allows the machine to operate relatively quietly and keep silent.

Our motor		Other's motor
Electromagnetic clutch + Helical tooth		Mechanical clutch + Straight tooth
The coil is energized to generate magnetism Efficient and smooth		Mechanical clutch structure general transmission efficiency, heavier hand pull
	VS	
Helical gear rotation reduces noise by 25%		Straight tooth rotation the gear bite is heavy
26dB 1 meter distance measured		35dB 1 meter distance measured

APPLICATION SCENARIO

Control multiple scenes easily

OFFICE

HOTEL

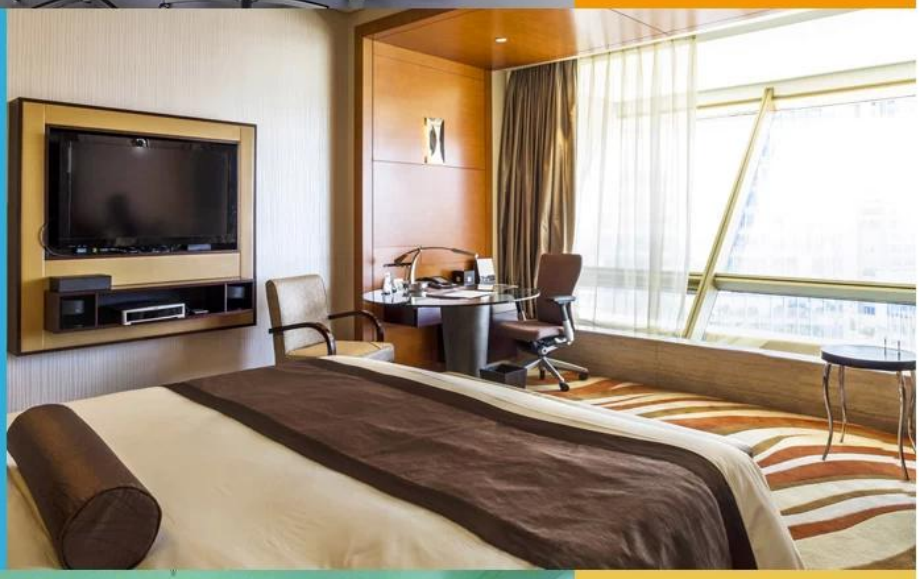

FACTORY

INTERPRET THE QUALITY

Better performance comes from
more refined quality

HELICAL TEETH MORE SILENT

Helical teeth design,makes the entire click smoother and quieter

DOUBLE SHOCK ABSORPTION

Double shock absorption design, more natural and stable when working

NO DEAD SPOTS PERFECT FIT

No dead spot design, perfectly fits the card position and groove

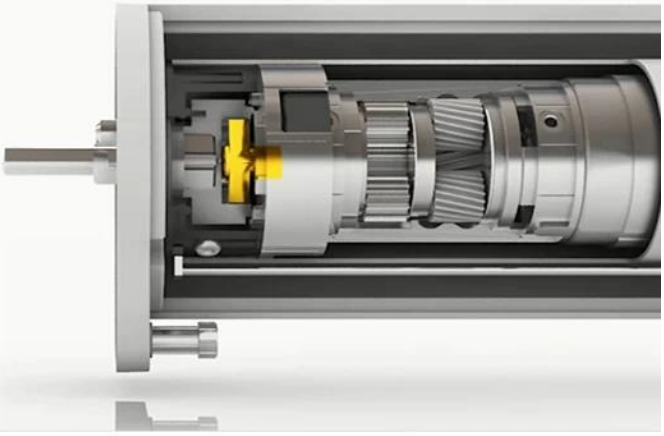

FULL SET OF SMART CURTAINS

Package design, including motor, track, remote control

Parameters	Smart curtain
Rated power	80W
Input voltage	AC100-240V 50/60Hz
Rated torque	1.5N·m
Rated load	80kg
Protection level	IP20
Motor size	316x68x53mm

Currently, 5G band WiFi is not supported, please select 2.4 band WiFi

The parameters mentioned above are subject to actual use, all data are derived from the testing center laboratory and are not absolute values.