S1[illegible]

[illegible]APP[illegible]

Light Weight
Fully Compatible
Wireless Transfer
Speed Sensor
Easy Install
Waterproof

Product Details

•□□□□□□□2.4G BLE
•□□□□□60mm * 20mm * 40mm
•□□□□□30g□□□□□□
•□□□□□CR2032□220mAh□
•□□□□□□□2.5□
•□□□□□□□-20□+ 60℃
•□□□□□IP65
•□□□□□80□□/□□
•□□□□□20rpm

Product Installation

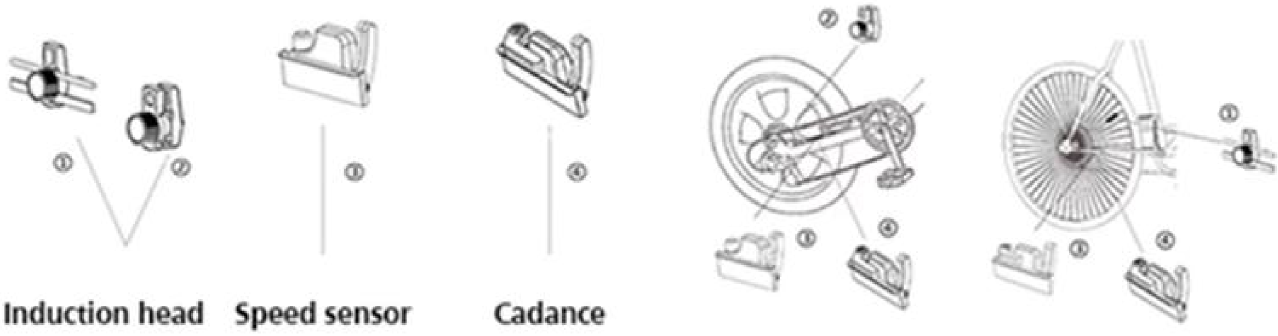

1.□□□□□□□□□□□□□□□□□□□
2.□□□□□□□□□□□□□□□□□□□□□1□2□□□□□
3.□□□□□□□□□□□□□□□□□□□□□□□□
□□□□4□□□□□□□□□□□□□□□□
5.□□□□□□□□□□□□□□□□□□□□□□□□□□
6.□□□

Product Package

无线智能测速传感器