□□□□ □□□□ □□ □□□□□□ □□□□□□□ □□□□□ GPS □□□□□□□□□□ □□□ □□□ □□□□□ □□□□□□□

Omni □□□□□ □□□□ □□□ □ □□□□□□□ □□□□□□□□ □□□□□ □□ □□□□□ □□□□□□ □□□□□□ □□□
2 □ □□□□□□□□□ □□□□□□□ □□□□□ G 4 □ G □ □□□□□□□ □□□□□□□ □□□ □□□ □□□□□□ □□□□□
□□□□□□□□□ □□□ □□□□ □□□□□□ □□□□□□□□ □□ □□□□□□□ □□□□□□ □□□□□ □□□□ □□□□□□
□□□□□□□□ □□□□□□□□ □□□□□□□□ □□□□□□□□ □□ □□□□□□ □□□□□□□□ □□□□□ □□□ □□□□□□□
□□□□□ □□□□ □ □□□□□ □□□ □□□□□□ □□□□□□□ □□□□□ □□□□ □□ □□□ :□□□□□□ □□□□□□□□□□□
□□□□□□□□ □□ □□□□□□□□ □□□□□□□□ □□□ □□□□□□□□ □□□□□□ □□□□□ □ □□□□□□□□□
□□□□□□□□□ □□□□□□□□□□□.

□□□□□□ □□□□□□□ □□□ □□□□□

1 □ □□□□□□ □□□□□ / □□□□□□ □□□□□ □□ □□□□□□ □□□

2 □ □□ □ □□□ □□□□□ □□□□□□□ □□□□□□ □□ □□□□□□□□□□ □□□□□□ □ □□□□□□ □□□□ □□□
100 □□□□□ □□□□ □□□□ □□□□□ □□□□□□□ □□□ □□□ □□ □□□□□□ □□□□□□□ □□□ □□□□□□□.

3 □ □□□□□ □□□□ 8000 :□□□□□□□□

4 □ 25 □□ □□□□ 3-2 □□□□ □□□□□□ □□□□ □□ □□□□ □ □□□□□□□□□ □□□ □□.

5 □ □□□□□ □□□ OTA.

6 □ □□□□□ □□□□ 60 □□□ □□□□□ □□□□ 10- :□□□□□ □□□□□ □□□□

7 □ □□□□□ □□□□ 80 □□□ □□□□□ □□□□ 40- :□□□□□□□ □□□□□ □□□□

8 □ 95 - □5 :□□□□□□□□

9 □ □□□□□ □□□□□□ □□□□□: IP66

10 □ □□□□□□□□□ □□□□□□□ □ □□□□□□□□ □□□□□□□ □ □□□□□ □□□□ 3000 □ □□□□ 6 □□□□□□
□□□□□□□ □□□□□□□□□ □□□□□□□□.

□□□□ □□ .□□□□□ □□□□ □□□□□□□ □□□□□□□□□ □□□ □□□ □□□ □□□□ □□□ □ □□□□□ □□□□□□
□□□□□ Bluetooth □ □□□□□□□ □□□□□□□ □□□ .□□□□□□ □□□□□□□ □□□□□ □□□ □□□□□ □□□□
□ □□□□□□ □□□□ □□ □□□□□ □□□□□ □□ □□□ □□ □□□□□□ □□□□□□ □□□□□□ □□□□ □ □□□□□□□
□□□□□□□ □□ □□□□□ □□□ □□ □□□□□□□ □□□.

□□□□ □□□□□ □ □□□□ a □□□□□□□ □□□ □□ □□□□□□ □□□.

SMART LOCK

MULTIPLE UNLOCKING METHODS ONE STEP AHEAD

1. APP scan code to unlock
2. Mobile Bluetooth unlock
3. Server remote command unlock

SMART LOCK

MULTI-MODE HIGH-PRECISION POSITIONING

GPS, Beidou, Glonass and other multi-mode high-precision positioning, real-time query, vehicle detection, and geo-fence can be set.

□□□□□ □□□□ □□ □□□□□ □□□□□□ □□□□□□□ □□□□□ □□□ □ □□□□□□□□ □□□□□□□□ □□□□□□□ □□□□□□ □□□□ □□□□□□□□ □□□ □□□ □□□□ □□□□□□ □□□□□□□ □□□□ □□ □□□□ □□□□ □ □□□□□ □□□□□□□ □□□□□ □□ □□□□□□ □□□□□□□□ □□□.

SMART LOCK

TWO CHARGING METHODS, SOLVE THE BATTERY LIFE PROBLEM

Support solar panel charging, DC head charging, improve battery life and emergency charging

□□□□□□ □□□□□□□ □□□□□□ □□□□□□□□□ □□□□□□□□ □□ □□□□

SMART LOCK

APPEARANCE AND SIZE

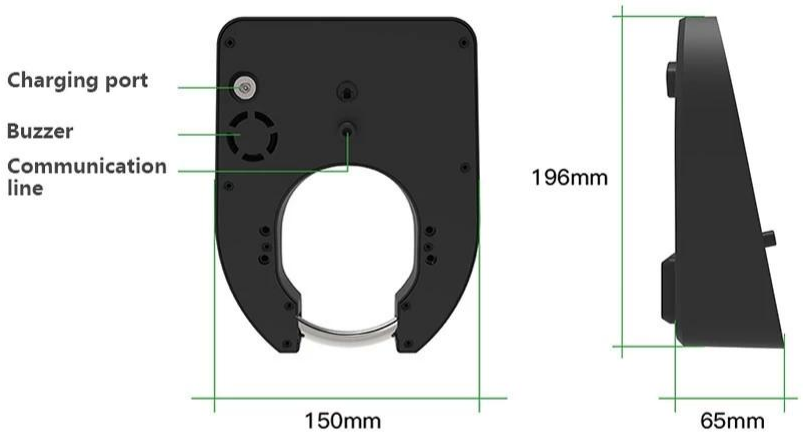

THE MAIN PARAMETERS

Communication method	2G/4G/BLE
Multiple targeting	GPS/Glonass/BDS
Upgrade method	OTA&BLE
Built-in battery	8000mAh
Steel ring diameter	8mm
Waterproof level	IPX6
Shell material	Aluminum alloy shell

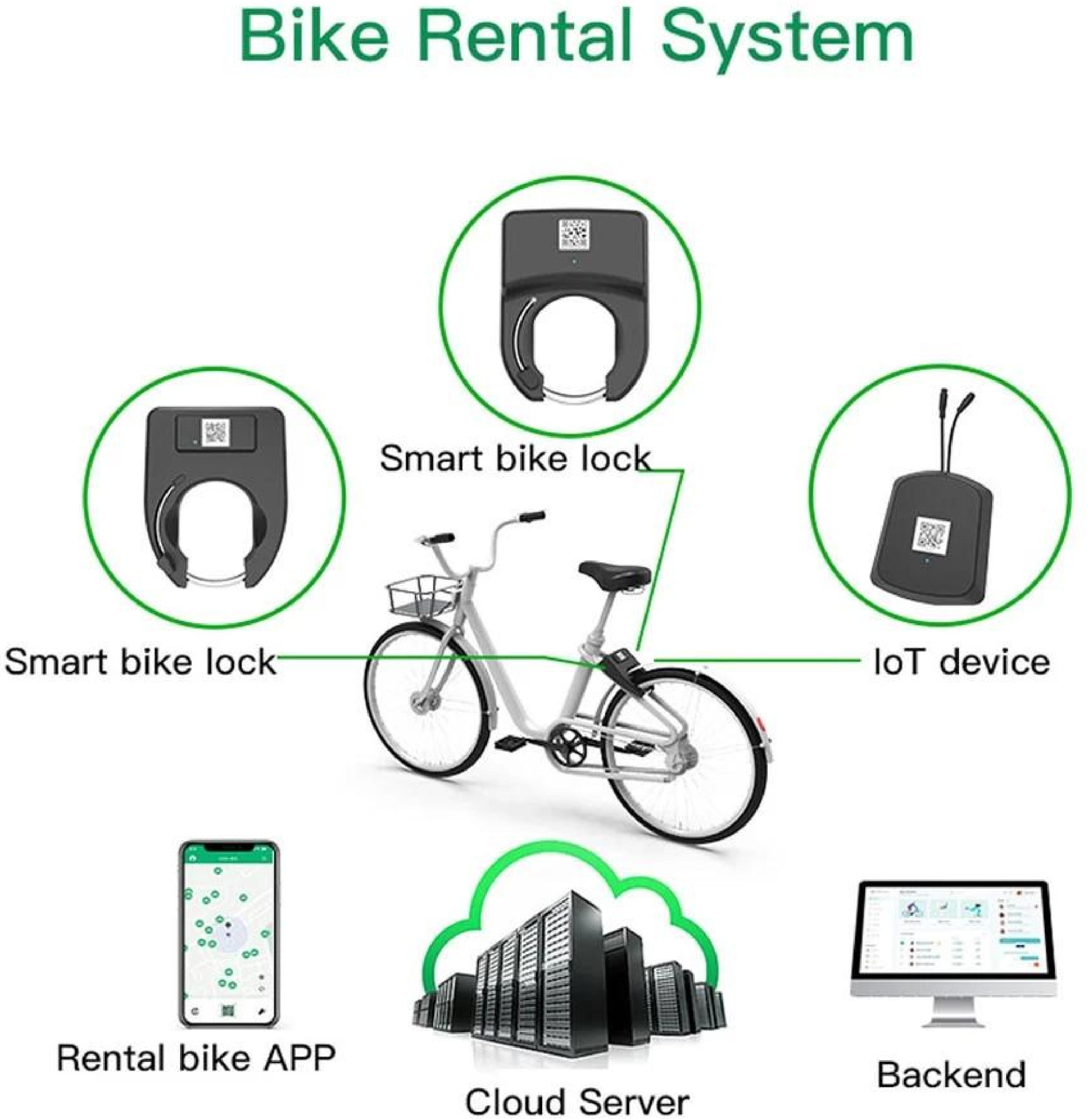
Bike Rental System
Smart bike lock
Smart bike lock
IoT device
Rental bike APP
Cloud Server
Backend

□□□□□□□□□ □□□□□□ □□□ □□□□□ □Omni □□□□□□□□ □□□□ □□□□□ □□ □□□□ □□□□ □□□□□ □□□□□□□□□□□ □□□□□□□□□ □□□□□□□□□.

INTERNET OF THINGS CORE
TECHNOLOGY SOLUTION PROVIDER
R & D + production + sales for 20 years
实用新型专利证书
实用新型专利证书
实用新型专利证书
EC-RED Certificate
EC-RED Certificate
Wilshire

3

01 Source factory (R&D + production + sales)

ODM/OEM personalized customization, daily output 2000 pieces,4000 square meters factory, independent laboratory

02 50+ member R&D team

Deeply cultivated in the field of Internet of Things for more than 20 years, mastering core technologies more than 200 patents

03 Quality assurance (20 years experience)

With 20 years of production experience, from product production to delivery
Standardized testing and control throughout the process

6000 m^2	20W pcs
The company covers an area	Monthly production

PARTNER

FEISHEN

思維翼

TOMOLOO

FSM

marti

SEGWAY

CYCLEHOP

Bai

XdS 喜德盛

ACTON

BAFANG

雅迪

台铃