□□□□□□□ □□□□□□□ □□□ □□□□□□ □□□ OBL1

1. □(□□□□□ 10 □□□□□) □□□□□□□□ □□□□ □□ □□□□□□ □□ □□□□□
□□□□□□□□□ □□□□□□ □□ □□□□□□□ □□□□□□□□□ □□□ □□□ □□□□ □□ □□□ □□□ □ □□□□□□□ .2
□□□□□□□□ □□□ □□□□□□ □□□□□ □□□ □□□□□□□□ □□□□□ □□□□
□□□□□□□□□ □□□□ □□ □□□□□□□ □□□ □□□□□ □□□□□ □□□□□ □□□ □□□□□□□ □□□□□ .3
□□ □□□□□ □□□ □□□/□□□ □□□□□□ □□□ □□□□□□□ □□□□□ □□□□ □□□ □ □□□□ □□□□□□□ □□□□ .4
□ □□□□ □□ □□□
□□□□□□□□ □□□□□□□ □□□□□ □□□□□□□□ □□□□□ □□□□□ .5 (LED).

GPS Positioning
Faster searching & locating speed realizes more accurate bike locating

Automatic & scan code to unlock
Automatic unlock, Lock by hand
Individual QR code

Long battery life
8000mAh battery and intelligent power management ensure 60 days work time

Stable & durable hardware
100,000 locking and unlocking tests witness its stable performance

OTA
Easy to update the GPS lock remotely

Efficient unlocking
BLE technology ensures efficient and reliable unlocking

Construction Parameters

□□□□□	OBL1 (□□□□□)
□□□□□□□ □□□□□	196*150*65(3 □□□ □□□□)
□□□	1.2 □□□
□□□□	□□□□ □□□□□□□□ □□□□□ □□□ 10 □□□□□ □□□□□□□ □□□□□□□ □□ □□□□□ □□□□□□□□□□□ □□□□□ □□ □□□□ □□□□□□□
□□□ □□□□□	□□□□□□
□□□□□ □□□□□	□□□□□ □□□□
□□□□ □□□□	2402-2480 □□□□ □□□□
□□□□□□	6000 □□□□□ □□□□ 8000/□□□□□ □□□□
□□□□□□ □□□□	□□□□□□□ □□□□□□□□
□□□□□□ □□□□□□□	2 ~ 3 □□□□□ □□□□
□□□□□□□ □□□□□ □□□□	-40 □□□□□ □□□□ 85 □□□ □□□□□ □□□□
□□□□□ □□□□□ □□□□	-20 □□□□□ □□□□ 65 □□□ □□□□□ □□□□
□□□□□□□ □□□□□□□	IP67 (□□□□□ 30 □□□□ □□□□□ □□□□□□ □□□□□□ □□□□□□□ □□□□□□ □□□□□.)
□□□□□	5%-95% □□□□□□□ □□□
□□□□ LED [□□□□]	□□□□ □□□□

City Cycling

Campus Cycling

Commercial and Office Buildings

Tourist Attractions

Countryside Sharing Bikes

Hotels Bike

Product Picture

omni

Bike sharing smart lock

omni

Product Size

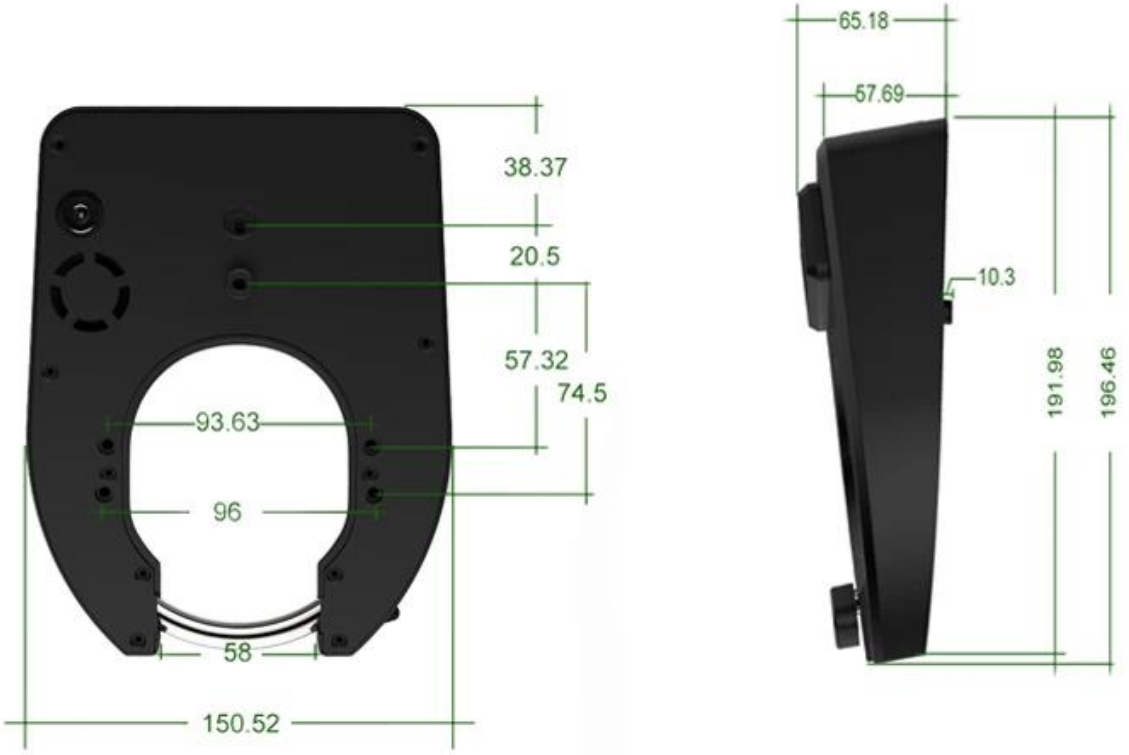

Product Detail

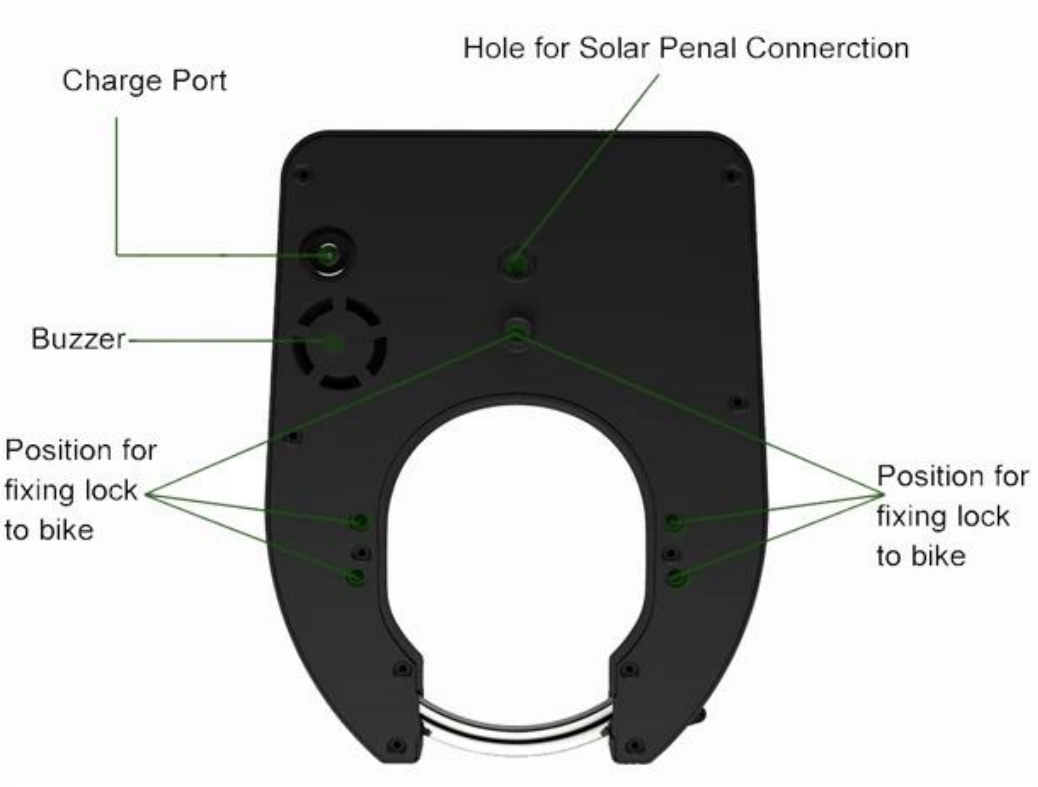

Bike sharing smart lock

omni

Bluetooth Smart Lock

Bike sharing smart lock

omni

Step 1: User downland App & Registration

Step 2: Search Bicycle

Bike sharing smart lock

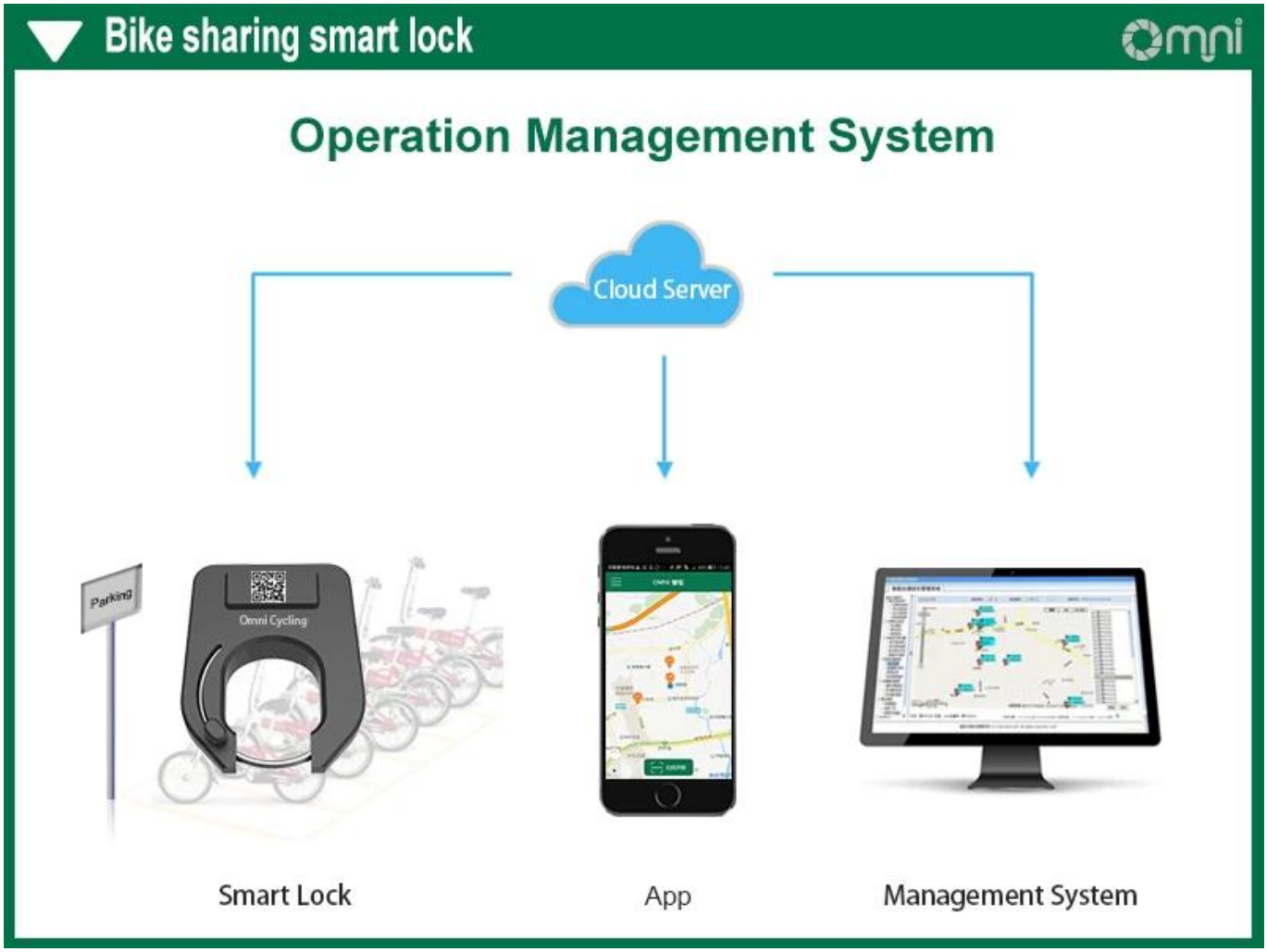

Company Informations

Omni □□□□□□ □□□□□□□□ □□□□□□□ □□□□□□ □□□□□□□ □□□□□ □ □□□□□□□ □□□□□□ □□ .□□□□□□□□□□ □□□□□□□□

□□ □□□□□□ □□ □□□□□ 12 □□ □□□□□ □□□□□ □□□□□□□□ □□□□□ □□□□ □□□□□□ □□□□□ □□□□□ □□□□□ □□□□□□.

Omni □□□□□□□□ □□□□□□□□□ □□□□□□" :□□□□□□□□ □□□□□□".

omni
欧米智能