OGG1 □□□□□□ □□□□□□□ □□□ □□ □□ □□ □□ □□□□□□□ □□□□□ □□□□

1. □□□□ □□ □□□□ □□□□ □□□□□ □□□□ GSM□ □□□□□□□□ □□□□□□□ GPS□ WIFI□
□□□□□□□□□ □□□□□□ □□ □□□□□□□ □□□□□□□□□ □□□ □□□ □□□□ □□ □□□ □□□ □ □□□□□□□ .2
□□□□□□□□ □□□ □□□□□□ □□□□□ □□□ □□□□□□□□ □□□□□ □□□□
□□□□□ □□□□□ □□□ □□ □□□□□□ □□□ □□□□□ □□□□□ □□□□□ □□□ □□□□□□□ □□□□□ .3
□□□□□□ □□□□□□□□ GPRS□
□□□□□□□□ □□□□□ □□ □□□□□□ □□□ □□□□□□ □□□□□□ □□□□□ .4
□□□□□□□□ □□□□□□□□□ □□□□□ □□□ □□□□□) □□□□□□□□ □□□□□ □□□□□ □□ □□□ □□ □□□ .5
□(□□□□□
□□□□□□□□ □□□ □□□□□□□□ □□□ □□ □□□□□/□□□□□ □□ □□□□□ □□□□ □□□□□□□ □□□□ .6
□□□□□□□□ □□□□□□ □□□ □□□□□□□□
□□□□□□□□□ □□□□□□□ □□□□□□ □□□ □□□□□□ □□□□□□□ □□□□ □□□□□ □□□□□ □□□□ .7
□□□□□□ □□□□□□ □□□□ □□□ □□□□□□ □□□□□ □□□□□□□ □□□□□□ □□□□□ .8 GPRS □□□□□ □□
□□□□□□.

GPS Positioning
Faster searching & locating speed realizes more accurate bike locating

Automatic & scan code to unlock
Automatic unlock, Lock by hand
Individual QR code

IP6 waterproof
Able to withstand inclement weather conditions

Stable & durable hardware
100,000 locking and unlocking tests witness its stable performance

OTA
Easy to update the GPS lock remotely

Efficient unlocking
GPRS technology ensures efficient and reliable unlocking

Construction Parameters

omni

□□□□□□ □□□	□□□□□□□ □□□ □□□
□□□□□□□ □□□□□	196*150*65(3 □□□ □□□□)
□□□	1.2 □□□
□□□□	10 □□□□□ □□□□□□□ □□□□□□□ □□ □□□□□ □□□□□□□□□□□ □□□□□ □□ □□□□ □□□□□□□ □□□□ □□□□□□□□ □□□□□ □□□
□□□ □□□□□	□□□□□□□□ □□□ □□□ □□ □□ □□
□□□□□ □□□□□	□□□ □□□□ □□□ □□ □□□□□□
□□ □□ □□ □□ □□□□	GSM850Mhz□ EGSM900Mhz□ DCS1800Mhz□ PCS1900Mhz
□□□□□□	6000 □□□□□ □□□□ 8000/□□□□□ □□□□
□□□□□□ □□□□	□□□□□□□ □□□□□□ □□□□
□□□□□□ □□□□□□□	2 ~ 3 □□□□□ □□□□
□□□□□□□ □□□□□ □□□□	-40 □□□□□ □□□□ 85 □□□ □□□□□ □□□□
□□□□□ □□□□□ □□□□	-20 □□□□□ □□□□ 65 □□□ □□□□□ □□□□

□□□□□□□ □□□□□	IP67 (30 □□□□ □□□□□ □□□□□□ □□□□□□ □□□□□□□ □□□□□□ □□□□□ □□□□□.)
□□□□□	5%-95%□ □□□□□□□ □□□
□□□□ LED [□□□□]	□□□□ □□□□

Omni□□□□□ □□□□□□ □□□□□□ □□□□□□□ □□□□□ □□□□□ □□□□□□ □□□□□□□□ □□□□□ □□□□□□□ □□□□□□□□□□ □□□□□□□ □□□□□ □□□□□□ □□□□□ □□ □□□□□□□□.

Campus Cycling

City Cycling

Commercial and Office Buildings

Countryside Sharing Bikes

Tourist Attractions

Hotels Bike

Product Picture

omni

Bike sharing smart lock

omni

Product Size

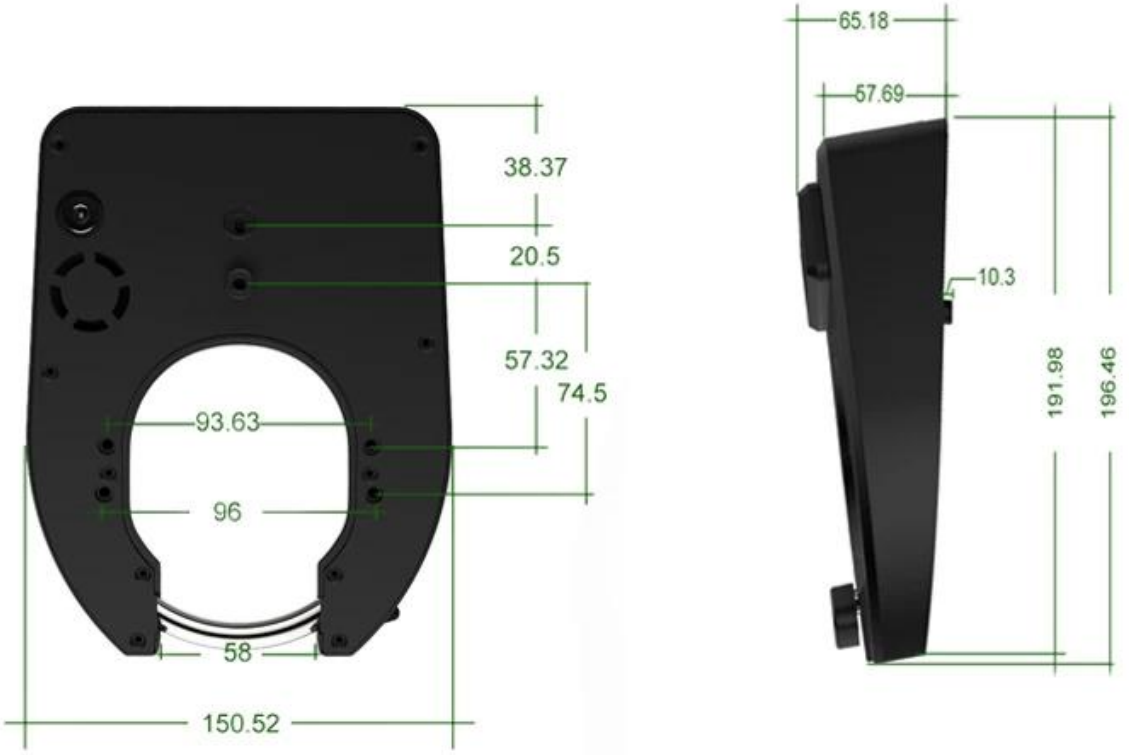

Product Detail

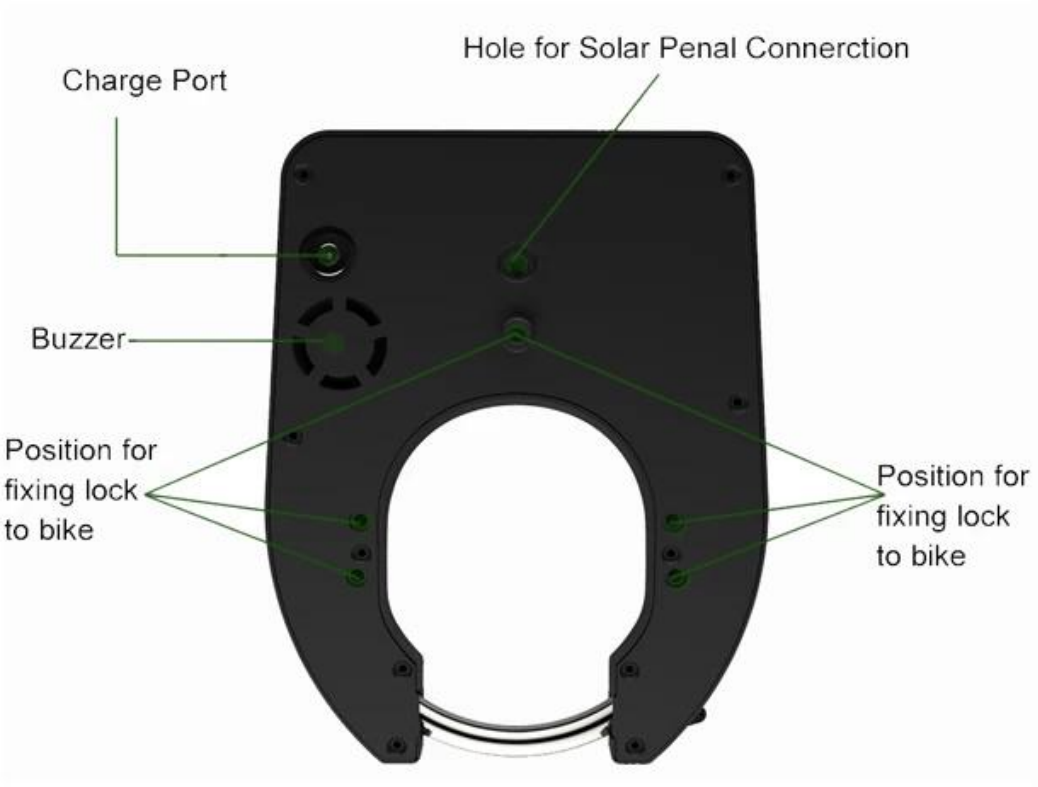

Bike sharing smart lock

omni

GPS+GPRS Smart Lock

GPS + GPRS

Bike sharing smart lock

omni

Step 1: User downland App & Registration

Step 2: Search Bicycle

Bike sharing smart lock

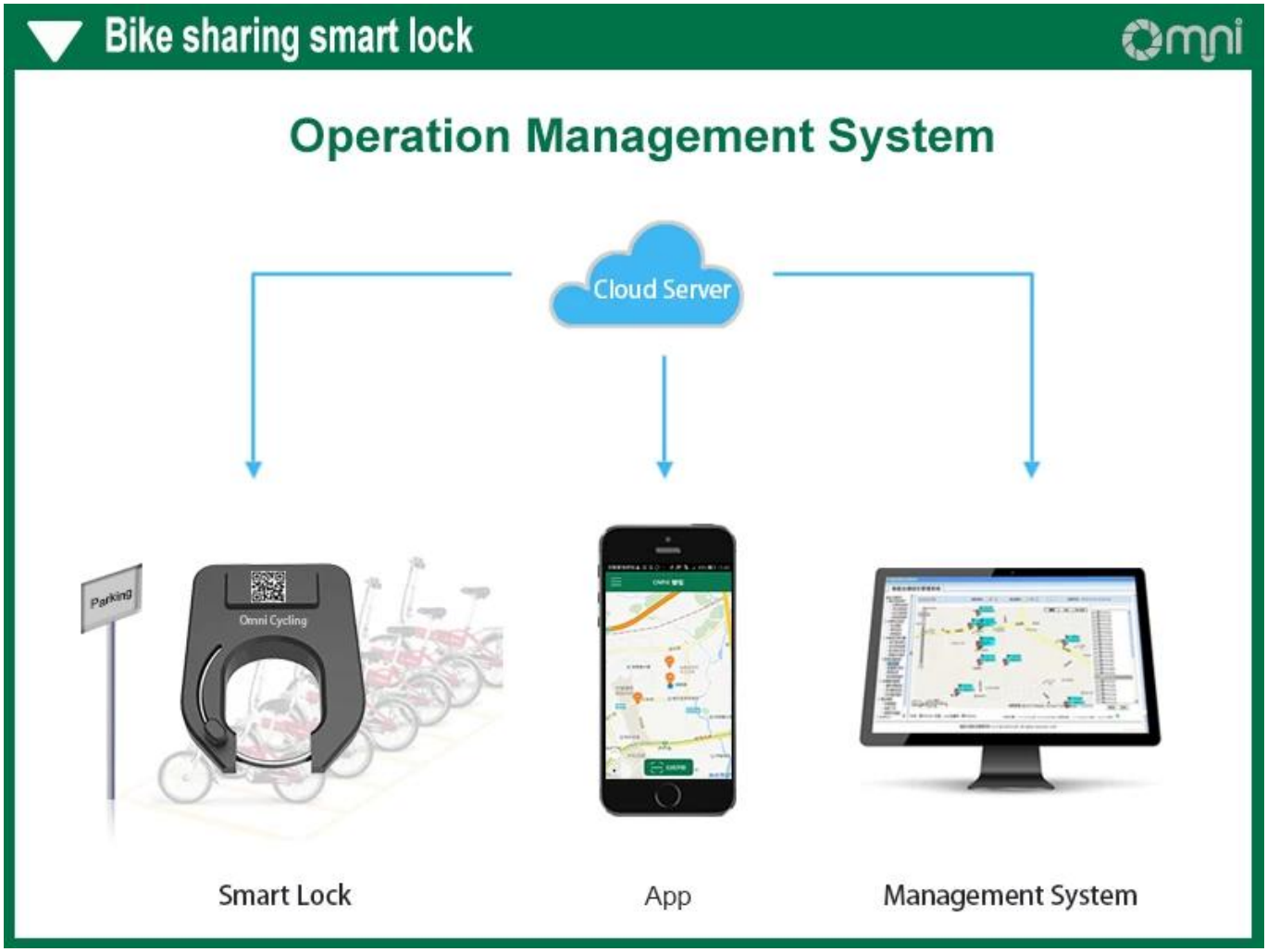

Company Informations

Omni □□□□□□□ □□□□ □□□□□ □□ □□□□□□□ □□□□□□□ □□□□□□□□□□□□ □□□□□ □□□□□ □□ □□□□□□□ □□□□□□□□□□□. Omni□□□□□□ □□□□ "s" □□□□ 100 □□ □□□□ □□ □□□□□ □□□□□□ □□□□□□ □□□□□□□ □□□□□□□□ □□□□□□□□□ □□□□□ □□□□□□ □□□□□□ :□□ □□□□□□□□□ □□□□□□□ □□□□□□ □□□□□□ □□□□□ □□ □□□□□□ □□□□□□ □□□□□□□ □□□□□□□□□□ □□□□□□□ □□□□□□□□□ □□□□□ □□□□□□□□ □□□□□ □□□□□ □□□□□□□ □□□□□□□ □□□□□□□□□□□□ □□□□□□□□□.

5 automatic and
semi-automatic production lines
1
2
The world's leading
shared platform solution
Advantages
Exports to 100 countries
5
3
12 years
professional R & D team
4
Establish long - term partnerships with fortune 500 companies

OUR CERTIFICATIONS